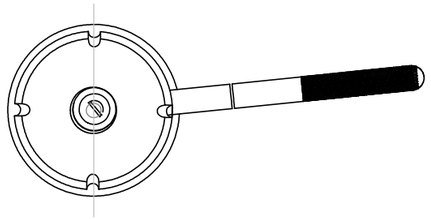

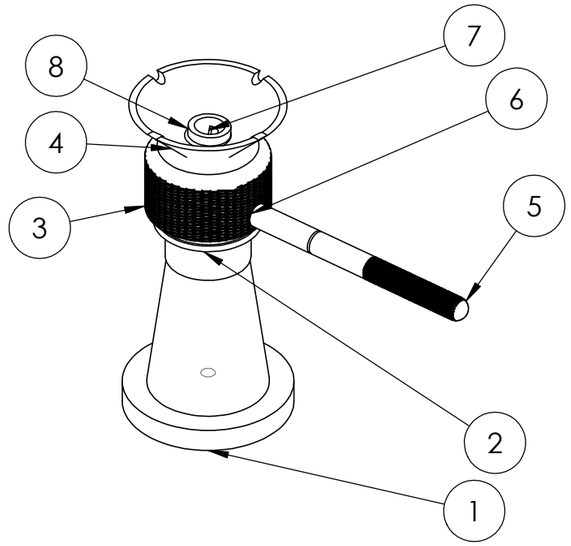

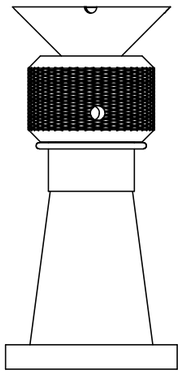

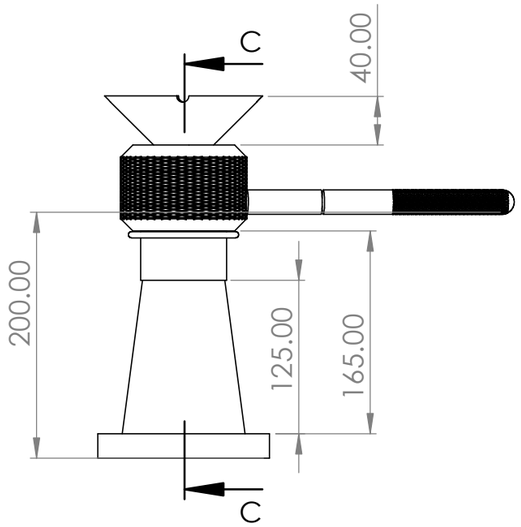

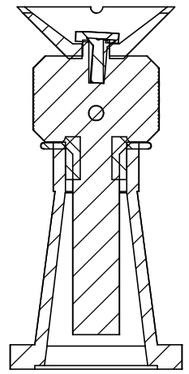

SECTION C-C

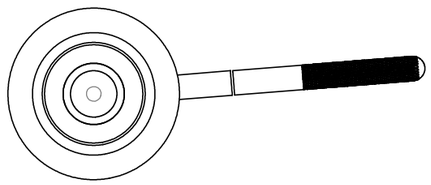

ITEM NO.	PART NUMBER	QTY.
1	BODY	1
2	NUT	1
3	SCREW - SPINDLE	1
4	CUP	1
5	TOMMY BAR 1	1
6	TOMMY BAR 2	1
7	CSK SCREW	1
8	WASHER SPECIAL	1

UNLESS OTHERWISE SPECIFIED:
DIMENSIONS ARE IN MILLIMETERS
SURFACE FINISH:
TOLERANCES:
LINEAR:
ANGULAR:

FINISH:

DEBURR AND BREAK SHARP EDGES

DO NOT SCALE DRAWING

REVISION

	NAME	SIGNATURE	DATE
DRAWN	S.MAHAVISHVA		
CHK'D			
APPV'D			
MFG			
Q.A			

TITLE:

MATERIAL:

WEIGHT:

DWG NO.

SCREW JACK ASSEMBLY

A3

SCALE:1:5

SHEET 1 OF 2

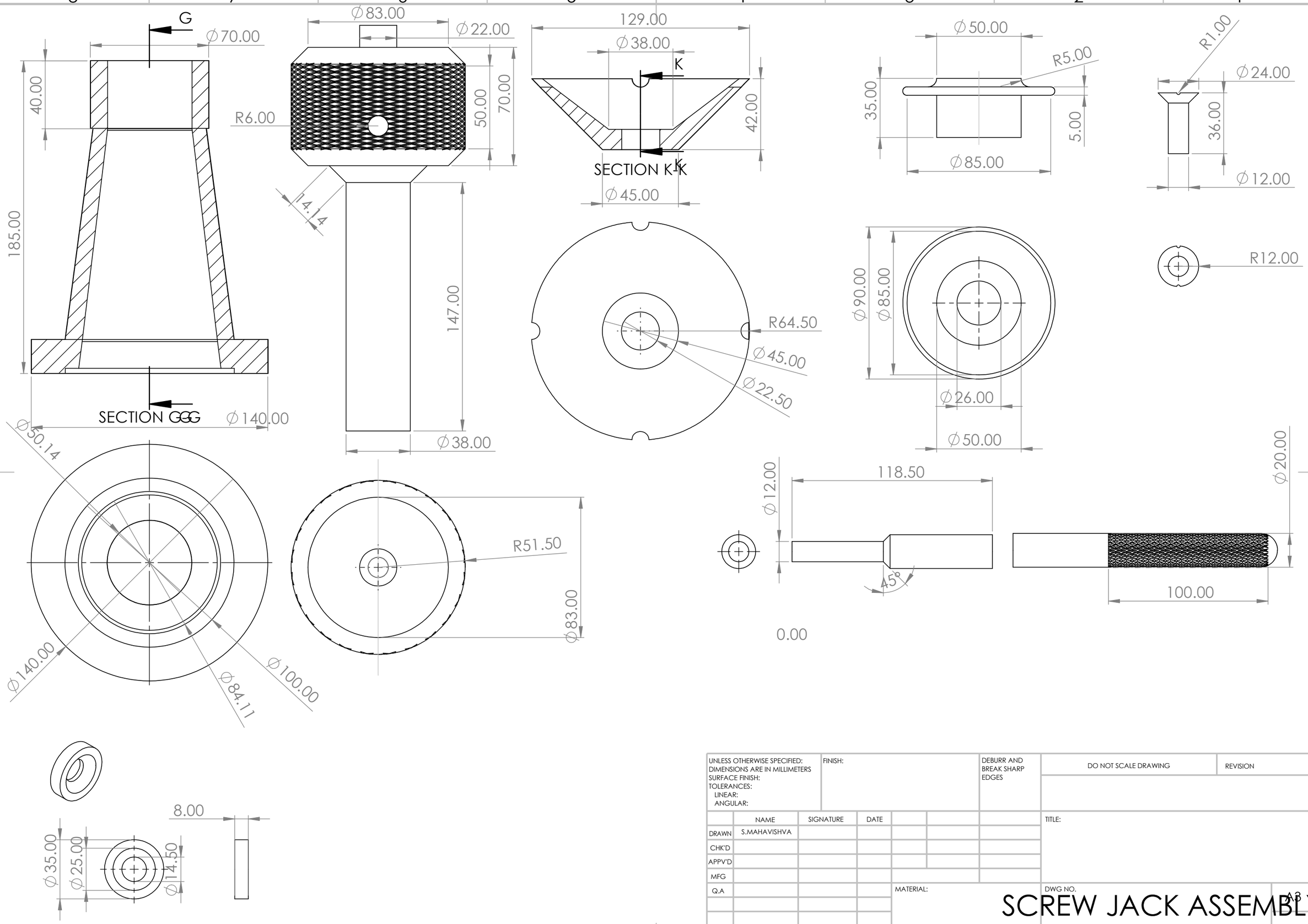

UNLESS OTHERWISE SPECIFIED: DIMENSIONS ARE IN MILLIMETERS SURFACE FINISH: TOLERANCES: LINEAR: ANGULAR:	FINISH:			DEBURR AND BREAK SHARP EDGES		DO NOT SCALE DRAWING	REVISION
	NAME	SIGNATURE	DATE			TITLE:	
DRAWN	S.MAHAVISHVA						
CHK'D							
APPV'D							
MFG							
Q.A				MATERIAL:		DWG NO.	A3
				WEIGHT:		SCALE:1:2	SHEET 2 OF 2

SCREW JACK ASSEMBLY